EURO1000

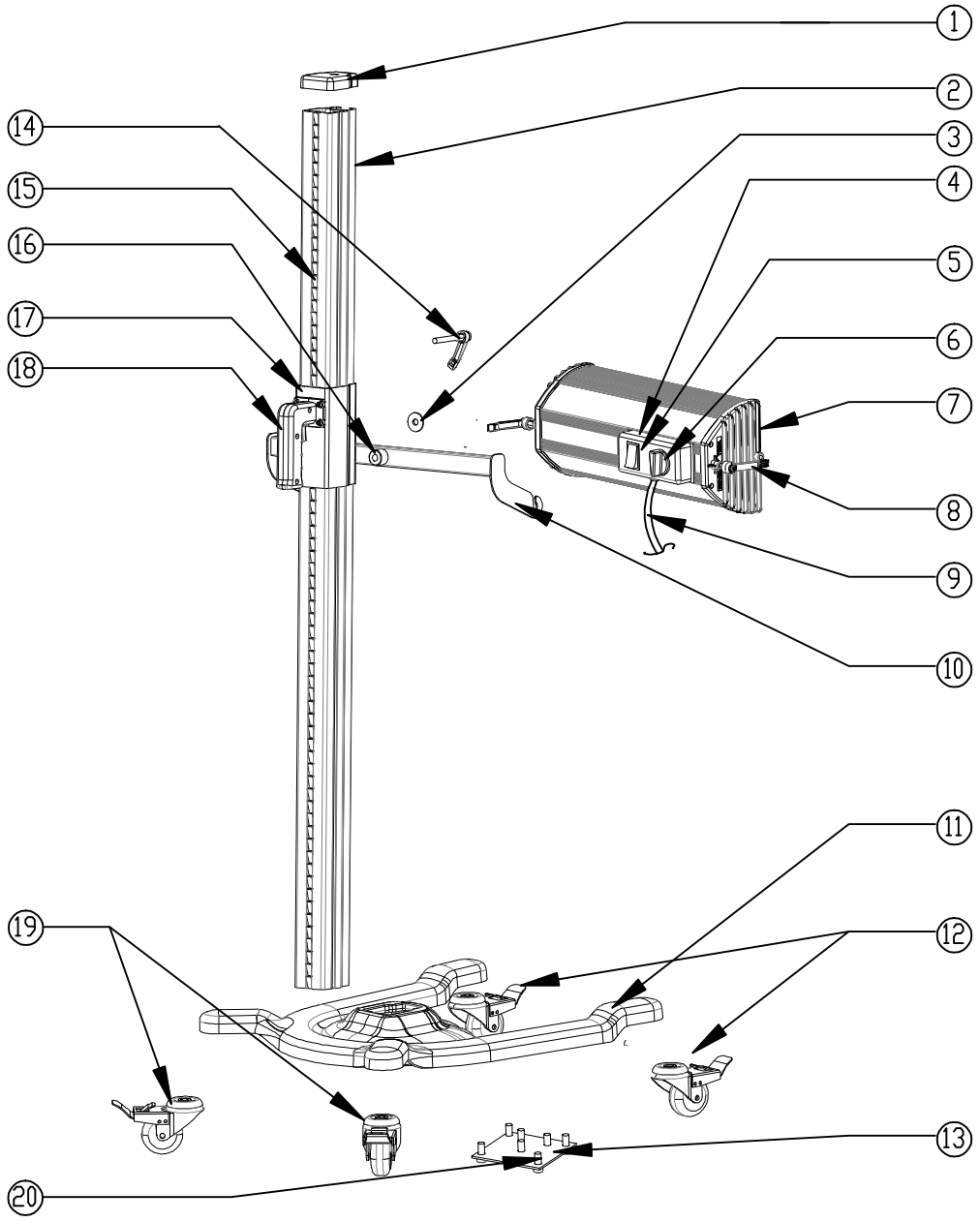

Part	Description	Part	Description	Part	Description	Part	Description
1	Top cap	6	Timer	11	Base	16	Anti-slip washer
2	COLUMN	7	Cassette	12	Caster	17	Gear box
3	Washer for cassette	8	Lock handle	13	pixing plate	18	Handle
4	Control box	9	Power cable	14	Lock handle	19	Caster with brake
5	Power switch	10	U-bracket	15	Rachet	20	M8 screw